Entris® II – Essential Line

Benefits

- Highly accurate results—guaranteed via monolithic weigh cell technology invented by Sartorius
- Fastest stabilization time in its class—using state-of-the-art weighing sensors
- High chemical resistance—ensured using parts made from hard-wearing polybutylene terephthalate (PBT), stainless steel and glass

Product Information

No matter what you're weighing, the new Entris® II is always the right choice. Offering unrivaled value at a budget price, this is the only balance in its class featuring isoCAL, LED touch technology and 12 built-in applications. Backed by almost 150 years of German engineering expertise, and available in 40 different models, you'll easily find an Entris® II balance that exactly meets your specific weighing needs.

Technical Specifications

General Technical Data

Ambient Conditions		Value
Installation site	For indoor use only, max. height above sea level:	3000 m
Temperature	Environment (metrological data):*	+10 - +30 °C
	Environment:	+5 - +40 °C
	Storage and transport:	-10 - +60 °C
Relative humidity**	At temperatures up to 31° C, non-condensing, then linear decrease from max. 80 % at 31° C to max. 50 % at 40° C:	15 - 80 %
No heat from heating systems or direct sunlight		
No electromagnetic fields		

Power Supply Device		Value
Input voltage:		15 V_{DC} (±10 %)
Power consumption, max:		4 W
Only by Sartorius power supply unit YEPS01-15V0W with interchangeable country-specific plug-in AC adaptors		

Power Supply Unit		Value
Type: Sartorius power supply unit YEPS01-15V0W		
Primary	Voltage:	100 - 240 V_{AC} (±10 %)
	Frequency:	50 - 60 Hz
	Current consumption, maximum:	0.2 A
Secondary	Voltage:	15 V_{DC} (±5 %)
	Current, maximum:	0.53 A
Short-circuit protection:		Electronic
Protection class according to IEC 60950-1:		II
Pollution level according to IEC 61010-1:		2
Overvoltage category according to IEC 60664-1:		II
Other data: See label on the power supply unit		

Electromagnetic Compatibility	
Interference resistance: Suitable for use in industrial areas	
Transient emissions:	Class B
	Suitable for use in residential areas and areas that are connected to a low voltage network that also supplies residential buildings.

Materials
Housing: Polybutylene terephthalate (PBT)
Control module: Glass
Draft shield: Glass / polybutylene terephthalate (PBT)
Weighing pan: Stainless steel

* For conformity-assessed (verified) balances in accordance with EU requirements, refer to the information on the balance.
** For conformity-assessed (verified) balances in accordance with EU requirements, the legal regulations apply.

Warm-up Time	Value
Device, approx	2 h

Interfaces

Specifications of the RS232 Interface

- Type of interface: Serial interface
- Interface operation: Full duplex
- Level: RS232
- Connection: D-sub connector, 9-pin
- Maximum cable length: 10 m
- Pin assignment

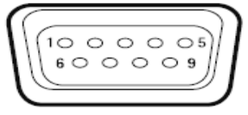

Pin 1: Not assigned
Pin 2: Data output (TxD)
Pin 3: Data input (RxD)
Pin 4: Not assigned
Pin 5: Internal ground
Pin 6: Not assigned
Pin 7: Clear to Send (CTS)
Pin 8: Request to Send (RTS)
Pin 9: Universal key

Specifications for the USB-C Interface

- Communication: USB UTL
- Connectable devices: Sartorius printers, Sartorius second display or PC

Calibration

Internal calibration isoCAL (models with marking i-1x)

External calibration

Selectable Weight Units*

Gram, kilogram, carat, pound, ounce, troy ounce, Hong Kong tael, Singapore tael, Taiwan tael, grain, pennyweights, milligram, parts per pound, China tael, mommes, Austrian carat, tola, baht, mesghal and Newton

Display

Intuitive, wear resistant LED screen with touch technology

Built-in Applications

- Weighing | Dosing
- Counting
- Percentage weighing
- Mixing | Net total
- Components | Totalizing
- Animal weighing
- Calculation | Free factor
- Density determination
- Underfloor weighing feature for bigger samples
- Statistics
- Peakhold
- Checkweighing
- Mass unit conversion

Languages

English, German, France, Italian, Spanish, Portuguese, Russian, Polish

Protection

- Chemical resistant housing parts
- Glass parts of the draft shield are coated to reduce electrostatic influences
- Display foil (available as assessory)
- Dust cover for balances with draft shield

Anti-theft Lock

Kensington lock and lockdown capability for cable or chain

* The availability of units depends on national legislation and is therefore country-specific.

Technical Specifications

Models with internal adjustment feature

Model	Unit	224i-1x[1]	124i-1x[1]	64i-1x[1]	653i-1x[1]	623i-1x[1]	423i-1x[1]	323i-1x[1]	223i-1x[1]	6202i-1x[1]	4202i-1x[1]	3202i-1x[1]	2202i-1x[1]	1202i-1x[1]	822i-1x[1]	622i-1x[1]	8201i-1x[1]	5201i-1x[1]	2201i-1x[1]	8200i-1x[1]	6200i-1x[1]
Readability | Scale interval (d)	mg	0.1	0.1	0.1	1	1	1	1	1	10	10	10	10	10	10	10	100	100	100	1,000	1,000
Maximum capacity (Max)	g	220	120	60	650	620	420	320	220	6,200	4,200	3,200	2,200	1,200	820	620	8,200	5,200	2,200	8,200	6,200
Weighing system		EMC	EMC	EMC	EMC	EMC	EMC	EMC	EMC	EMC	EMC	EMC	EMC	EMC	EMC	EMC	EMC	EMC	EMC	EMC	EMC
Repeatability																					
At 5% load, typical value	±mg	0.08	0.08	0.08	0.5	0.5	0.5	0.5	0.5	5	5	5	5	5	5	5	50	50	50	500	500
At approx. maximum load, typical value	±mg	0.1	0.1	0.1	1	1	1	1	1	10	10	10	10	10	10	10	100	100	100	1,000	1,000
Linearity deviation																					
Limits	±mg	0.2	0.2	0.2	2	2	2	2	2	20	20	20	20	20	20	20	100	100	100	1,000	1,000
Typical value	±mg	0.06	0.06	0.06	0.6	0.6	0.6	0.6	0.6	6	6	6	6	6	6	6	60	60	60	600	600
Sensitivity drift between +10 °C and +30 °C	±ppm/K	1.5	1.5	1.5	2	2	2	2	2	2	2	2	2	2	2	2	4	2	2	4	4
Tare maximum capacity (subtractive)		<100% of maximum capacity								<100% of maximum capacity											
isoCAL (only for i-1x models):																					
Temperature change	K	1.5	1.5	1.5	2	2	2	2	2	2	2	2	2	2	2	2	2	2	2	2	2
Time interval	h	4	4	4	6	6	6	6	6	6	6	6	6	6	6	6	6	6	6	6	6
For models with approval:																					
Accuracy class		I	I	I	II	II	II	II	II	II	II	II	II	II	II	II	II	II	II	II	II
Type		BC_EB	BC_EB	BC_EB	BC_ED	BC_ED	BC_ED	BC_ED	BC_ED	BC_EE	BC_EE	BC_EE	BC_EE	BC_EE	BC_EE	BC_EE	BC_EG	BC_EE	BC_EE	BC_EG	BC_EG
Verification scale interval (e)	mg	1	1	1	10	10	10	10	10	100	100	100	100	100	100	100	1,000	100	100	1,000	1,000
Minimum load (Min)	mg	10	10	10	20	20	20	20	20	500	500	500	500	500	500	500	5,000	5,000	5,000	50,000	50,000
Minimum initial weighing according to USP (United States Pharmacopeia), Chap. 41																					
Optimum minimum initial weighing	g	0.082	0.082	0.082	0.82	0.82	0.82	0.82	0.82	8.2	8.2	8.2	8.2	8.2	8.2	8.2	82	82	82	820	820
Typical minimum initial weighing	g	0.16	0.16	0.16	1	1	1	1	1	10	10	10	10	10	10	10	100	100	100	1,000	1,000
Typical measurement time	s	≤ 2.0	≤ 2.0	≤ 2.0	≤ 1.5	≤ 1.5	≤ 1.5	≤ 1.5	≤ 1.5	≤ 1.0	≤ 1.0	≤ 1.0	≤ 1.0	≤ 1.0	≤ 1.0	≤ 1.0	≤ 1.0	≤ 1.0	≤ 1.0	≤ 1.0	≤ 1.0
Typical stabilization time	s	≤ 1.5	≤ 1.5	≤ 1.5	≤ 1.0	≤ 1.0	≤ 1.0	≤ 1.0	≤ 1.0	≤ 0.9	≤ 0.9	≤ 0.9	≤ 0.9	≤ 0.9	≤ 0.9	≤ 0.9	≤ 0.9	≤ 0.9	≤ 0.9	≤ 0.9	≤ 0.9
Recommended calibration weight																					
External calibrated test weight	g	200	100	50	500	500	200	200	200	5,000	2,000	2,000	2,000	1,000	500	500	5,000	5,000	2,000	5,000	5,000
Accuracy class in accordance with OIML R111-1		E2	E2	E2	F1	F1	F1	F1	F1	F1	F1	F1	F1	F1	F2	F2	F2	F2	F2	F2	F2
Weighing pan size	mm	Ø 90	Ø 90	Ø 90	Ø 120	Ø 120	Ø 120	Ø 120	Ø 120	182 x 182	182 x 182	182 x 182	182 x 182	182 x 182	182 x 182	182 x 182	182 x 182	182 x 182	182 x 182	182 x 182	182 x 182
Weighing chamber height*	mm	240	240	240	50	240	240	240	240	-	-	-	-	-	-	-	-	-	-	-	-
Net weight, approx.	kg	6.20	6.20	6.20	4.80	6.30	6.30	6.30	6.30	6.20	6.20	6.20	6.20	6.20	6.20	6.20	6.20	6.20	6.20	6.20	6.20
Gross weight, approx.	kg	8.00	8.00	8.00	6.20	8.10	8.10	8.10	8.10	7.00	7.00	7.00	7.00	7.00	7.00	7.00	7.00	7.00	7.00	7.00	7.00

* upper edge of the weighing pan to the lower edge of the upper draft shield panel

1 Country-specific marking in model:

- x = S: Standard balances without country-specific additions
- x = SAR: Standard balances with country-specific additions for Argentina
- x = SJP: Standard balances with country-specific additions for Japan
- x = SKR: Standard balances with country-specific additions for South Korea
- x = CCN: Balances with approval for China
- x = CEU: Conformity-assessed balances with EU type examination certificate without country-specific additions
- x = CFR: Conformity-assessed balances with EU type examination certificate only for France
- x = OBR: Balances with approval for Brazil
- x = OIN: Balances with approval for India
- x = OJP: Balances with approval for Japan
- x = ORU: Balances with approval for Russia

Models without internal adjustment feature, with approval

Model	Unit	224-1x[1]	124-1x[1]	64-1x[1]	653-1x[1]	623-1x[1]	423-1x[1]	323-1x[1]	223-1x[1]	6202-1x[1]	4202-1x[1]	3202-1x[1]	2202-1x[1]	1202-1x[1]	822-1x[1]	622-1x[1]	8201-1x[1]	5201-1x[1]	2201-1x[1]	8200-1x[1]	6200-1x[1]
Readability | Scale interval (d)	mg	0.1	0.1	0.1	1	1	1	1	1	10	10	10	10	10	10	10	100	100	100	1,000	1,000
Maximum capacity (Max)	g	220	120	60	650	620	420	320	220	6,200	4,200	3,200	2,200	1,200	820	620	8,200	5,200	2,200	8,200	6,200
Weighing system		EMC	EMC	EMC	EMC	EMC	EMC	EMC	EMC	EMC	EMC	EMC	EMC	EMC	EMC	EMC	Strain gauge	EMC	EMC	Strain gauge	Strain gauge
Repeatability																					
At 5% load, typical value	±mg	0.08	0.08	0.08	0.5	0.5	0.5	0.5	0.5	5	5	5	5	5	5	5	50	50	50	500	500
At approx. maximum load, typical value	±mg	0.1	0.1	0.1	1	1	1	1	1	10	10	10	10	10	10	10	100	100	100	1,000	1,000
Linearity deviation																					
Limits	±mg	0.2	0.2	0.2	2	2	2	2	2	20	20	20	20	20	20	20	300	100	100	1,000	1,000
Typical value	±mg	0.06	0.06	0.06	0.6	0.6	0.6	0.6	0.6	6	6	6	6	6	6	6	100	60	60	600	600
Sensitivity drift between +10 °C and +30 °C	±ppm/K	1.5	1.5	1.5	2	2	2	2	2	2	2	2	2	2	2	2	7	2	2	7	7
Tare maximum capacity (subtractive)		<100% of maximum capacity								<100% of maximum capacity											
For models with approval:																					
Accuracy class		I	I	I	II	II	II	II	II	II	II	II	II	II	II	II	II	II	II	II	II
Type		BC_EB	BC_EB	BC_EB	BC_ED	BC_ED	BC_ED	BC_ED	BC_ED	BC_EE	BC_EE	BC_EE	BC_EE	BC_EE	BC_EE	BC_EE	BC_EI	BC_EE	BC_EE	BC_EI	BC_EI
Verification scale interval (e)	mg	1	1	1	10	10	10	10	10	100	100	100	100	100	100	100	1,000	100	100	1,000	1,000
Minimum load (Min)	mg	10	10	10	20	20	20	20	20	500	500	500	500	500	500	500	5,000	5,000	5,000	50,000	50,000
Minimum initial weighing according to USP (United States Pharmacopeia), Chap. 41																					
Optimum minimum initial weighing	g	0.082	0.082	0.082	0.82	0.82	0.82	0.82	0.82	8.2	8.2	8.2	8.2	8.2	8.2	8.2	82	82	82	820	820
Typical minimum initial weighing	g	0.16	0.16	0.16	1	1	1	1	1	10	10	10	10	10	10	10	100	100	100	1,000	1,000
Typical measurement time	s	≤ 2.0	≤ 2.0	≤ 2.0	≤ 1.5	≤ 1.5	≤ 1.5	≤ 1.5	≤ 1.5	≤ 1.0	≤ 1.0	≤ 1.0	≤ 1.0	≤ 1.0	≤ 1.0	≤ 1.0	≤ 1.0	≤ 1.0	≤ 1.0	≤ 1.0	≤ 1.0
Typical stabilization time	s	≤ 1.5	≤ 1.5	≤ 1.5	≤ 1.0	≤ 1.0	≤ 1.0	≤ 1.0	≤ 1.0	≤ 0.9	≤ 0.9	≤ 0.9	≤ 0.9	≤ 0.9	≤ 0.9	≤ 0.9	≤ 0.9	≤ 0.9	≤ 0.9	≤ 0.9	≤ 0.9
Recommended calibration weight																					
External calibrated test weight	g	200	100	50	500	500	200	200	200	5,000	2,000	2,000	2,000	1,000	500	500	5,000	5,000	2,000	5,000	5,000
Accuracy class in accordance with OIML R111-1		E2	E2	E2	F1	F1	F1	F1	F1	F1	F1	F1	F1	F1	F2	F2	F2	F2	F2	F2	F2
Weighing pan size	mm	Ø 90	Ø 90	Ø 90	Ø 120	Ø 120	Ø 120	Ø 120	Ø 120	182 x 182	182 x 182	182 x 182	182 x 182	182 x 182	182 x 182	182 x 182	182 x 182	182 x 182	182 x 182	182 x 182	182 x 182
Weighing chamber height*	mm	240	240	240	50	240	240	240	240	-	-	-	-	-	-	-	-	-	-	-	-
Net weight, approx.	kg	5.90	5.90	5.90	4.50	5.90	5.90	5.90	5.90	4.60	4.60	4.60	4.60	4.60	4.60	4.60	4.30	4.60	4.60	4.30	4.30
Gross weight, approx.	kg	7.70	7.70	7.70	5.80	7.70	7.70	7.70	7.70	5.40	5.40	5.40	5.40	5.40	5.40	5.40	5.10	5.40	5.40	5.10	5.10

* upper edge of the weighing pan to the lower edge of the upper draft shield panel

1 Country-specific marking in model:
x = CCN: Balances with approval for China
x = OIN: Balances with approval for India

Models without internal adjustment feature, without approval

Model	Unit	224-1x[1]	124-1x[1]	64-1x[1]	653-1x[1]	623-1x[1]	423-1x[1]	323-1x[1]	223-1x[1]	6202-1x[1]	4202-1x[1]	3202-1x[1]	2202-1x[1]	1202-1x[1]	822-1x[1]	622-1x[1]	8201-1x[1]	5201-1x[1]	2201-1x[1]	8200-1x[1]	6200-1x[1]
Readability | Scale interval (d)	mg	0.1	0.1	0.1	1	1	1	1	1	10	10	10	10	10	10	10	100	100	100	1,000	1,000
Maximum capacity (Max)	g	220	120	60	650	620	420	320	220	6,200	4,200	3,200	2,200	1,200	820	620	8,200	5,200	2,200	8,200	6,200
Weighing system		EMC	EMC	EMC	EMC	EMC	EMC	EMC	EMC	EMC	EMC	EMC	Strain gauge	Strain gauge	Strain gauge	Strain gauge	Strain gauge	Strain gauge	Strain gauge	Strain gauge	Strain gauge
Repeatability																					
At 5% load, typical value	±mg	0.08	0.08	0.08	0.5	0.5	0.5	0.5	0.5	5	5	5	5	5	5	5	50	50	50	500	500
At approx. maximum load, typical value	±mg	0.1	0.1	0.1	1	1	1	1	1	10	10	10	10	10	10	10	100	100	100	1,000	1,000
Linearity deviation																					
Limits	±mg	0.2	0.2	0.2	2	2	2	2	2	20	20	20	20	20	20	20	300	300	300	1,000	1,000
Typical value	±mg	0.06	0.06	0.06	0.6	0.6	0.6	0.6	0.6	6	6	6	6	6	6	6	100	100	100	600	600
Sensitivity drift between +10 °C and +30 °C	±ppm/K	1.5	1.5	1.5	2	2	2	2	2	2	2	2	3.5	3.5	3.5	3.5	7	7	7	7	7
Tare maximum capacity (subtractive)		<100% of maximum capacity											<100% of maximum capacity								
Minimum initial weighing according to USP (United States Pharmacopeia), Chap. 41																					
Optimum minimum initial weighing	g	0.082	0.082	0.082	0.82	0.82	0.82	0.82	0.82	8.2	8.2	8.2	8.2	8.2	8.2	8.2	82	82	82	820	820
Typical minimum initial weighing	g	0.16	0.16	0.16	1	1	1	1	1	10	10	10	10	10	10	10	100	100	100	1,000	1,000
Typical measurement time	s	≤ 2.0	≤ 2.0	≤ 2.0	≤ 1.5	≤ 1.5	≤ 1.5	≤ 1.5	≤ 1.5	≤ 1.0	≤ 1.0	≤ 1.0	≤ 1.0	≤ 1.0	≤ 1.0	≤ 1.0	≤ 1.0	≤ 1.0	≤ 1.0	≤ 1.0	≤ 1.0
Typical stabilization time	s	≤ 1.5	≤ 1.5	≤ 1.5	≤ 1.0	≤ 1.0	≤ 1.0	≤ 1.0	≤ 1.0	≤ 0.9	≤ 0.9	≤ 0.9	≤ 0.9	≤ 0.9	≤ 0.9	≤ 0.9	≤ 0.9	≤ 0.9	≤ 0.9	≤ 0.9	≤ 0.9
Recommended calibration weight																					
External calibrated test weight	g	200	100	50	500	500	200	200	200	5,000	2,000	2,000	2,000	1,000	500	500	5,000	5,000	2,000	5,000	5,000
Accuracy class in accordance with OIML R111-1		E2	E2	E2	F1	F1	F1	F1	F1	F1	F1	F1	F1	F1	F2	F2	F2	F2	F2	F2	F2
Weighing pan size	mm	Ø 90	Ø 90	Ø 90	Ø 120	Ø 120	Ø 120	Ø 120	Ø 120	182 x 182	182 x 182	182 x 182	182 x 182	182 x 182	182 x 182	182 x 182	182 x 182	182 x 182	182 x 182	182 x 182	182 x 182
Weighing chamber height*	mm	240	240	240	50	240	240	240	240	-	-	-	-	-	-	-	-	-	-	-	-
Net weight, approx.	kg	5.90	5.90	5.90	4.50	5.90	5.90	5.90	5.90	4.60	4.60	4.60	4.30	4.30	4.30	4.30	4.30	4.30	4.30	4.30	4.30
Gross weight, approx.	kg	7.70	7.70	7.70	5.80	7.70	7.70	7.70	7.70	5.10	5.10	5.10	5.10	5.10	5.10	5.10	5.10	5.10	5.10	5.10	5.10

* upper edge of the weighing pan to the lower edge of the upper draft shield panel

1 Country-specific marking in model:
x = S: Standard balances without country-specific additions
x = SAR: Standard balances with country-specific additions for Argentina
x = SJP: Standard balances with country-specific additions for Japan
x = SKR: Standard balances with country-specific additions for South Korea

Technical Drawings

Models with a readability of 0.1 mg
All dimensions are given in millimeters

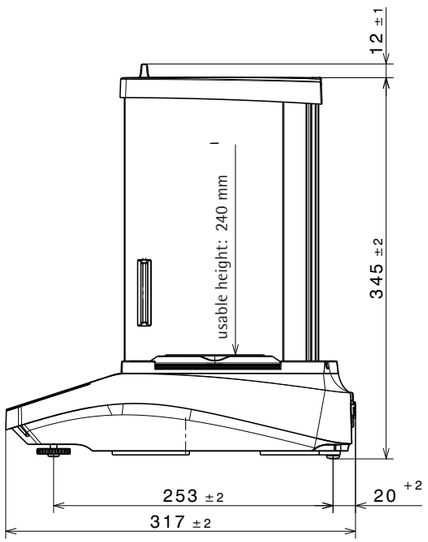

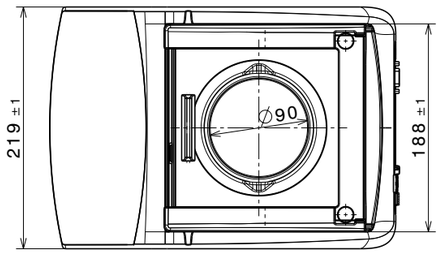

Models with a readability of 1 mg
All dimensions are given in millimeters

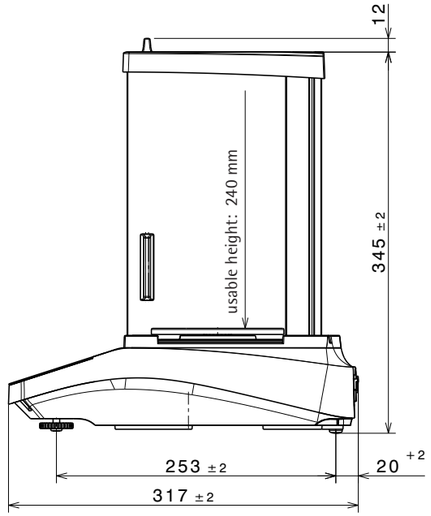

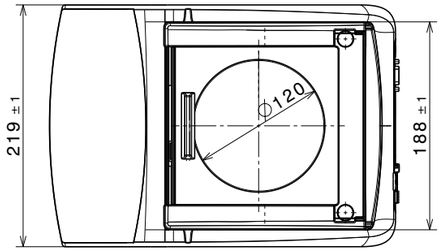

Models with a readability of 1 mg, with round glass shield
All dimensions are given in millimeters

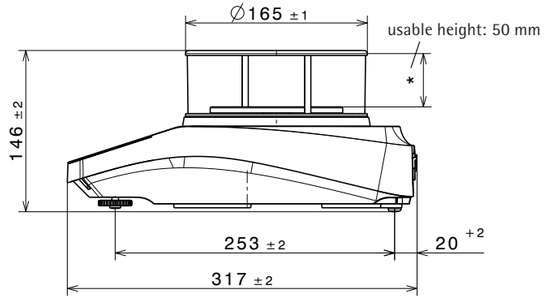

Models with a readability of ≥ 10 mg
All dimensions are given in millimeters

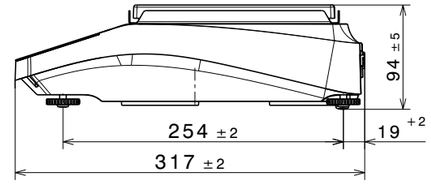

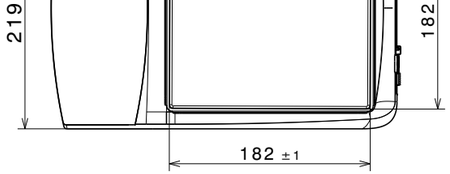

Accessories

These tables contain an excerpt of the accessories that can be ordered. For information on other products, contact Sartorius.

Balance Accessories

Item	Quantity	Order number
Display protection film (set of 5)	1	YDC10
Shield disk for balances with a readability of 0.1 mg	1	YSP02
Dust cover for balances with an analytical draft shield	1	6960BC01
Density determination set for solids and liquids for balances with a readability of 0.1 mg | 1 mg	1	YDK03
"Kensington Lock" anti-theft device	1	YKL01
Pedal button | foot switch	1	YFS03
Second display | remote display	1	YSD01
Below-balance weighing (not for models in legal metrology)		
Hook M5	1	69EA0039
Weighing table		
Made from wood with natural stone	1	YWT09
Made from natural stone, with vibration dampening	1	YWT03
Wall console made from natural stone	1	YWT04

Printer and Accessories for Data Communication

Item	Quantity	Order number
Thermal printer (USB-B)	1	YDP40
Thermal transfer printer (USB-B, RS232)	1	YDP30
Dot matrix printer (RS232)	1	YDP20-0CE
Data cable USB-C > USB-B	1.5 m	YCC-USB-C-B
Data cable USB-C > USB-A	1.5 m	YCC-USB-C-A
Data cable RS232 (9-pin) > USB-A	1.5 m	YCC-D09M-USB-A
Data cable RS232 (9-pin) male > RS232 (9-pin) male	1.5 m	YCC-D09MM
Data cable RS232 (9-pin) male > RS232 (9-pin) female	1.5 m	YCC-D09MF
Y-adapter RS232 (9-pin) male > 2x RS232 (9-pin) female	1.5 m	YCC-D09M-2D09F

External Calibration and Adjustment Weights

BCE model	Weight	Accuracy class	Quantity	Order number
224	200 g	E2	1	YCW522-AC-02
124	100 g	E2	1	YCW512-AC-02
64	50 g	E2	1	YCW452-AC-02
653 | 623	500 g	F1	1	YCW553-AC-02
423 | 323 | 223	200 g	F1	1	YCW523-AC-02
6202	5,000 g	F1	1	YCW653-AC-02
4202 | 3202 | 2202	2,000 g	F1	1	YCW623-AC-02
1202	1,000 g	F1	1	YCW613-AC-02
822 | 622	500 g	F2	1	YCW554-AC-02
8201 | 5201	5,000 g	F2	1	YCW654-AC-02
2201	2,000 g	F2	1	YCW624-AC-02
8200 | 6200	5,000 g	F2	1	YCW654-AC-02

Learn more with Northern Balance

As UKAS accredited weighing specialists, Northern Balance has been supplying, servicing and calibrating the world's most trusted brands for nearly 50 years. Our customers rely on us for our wealth of product knowledge, quality service and first-class support. Trust us to find an Entris II® solution that meets your weighing needs.

www.northernbalance.co.uk/entris2

northern BALANCE

Tel: 0344 477 1966
Email: hello@northernbalance.co.uk
Web: www.northernbalance.co.uk